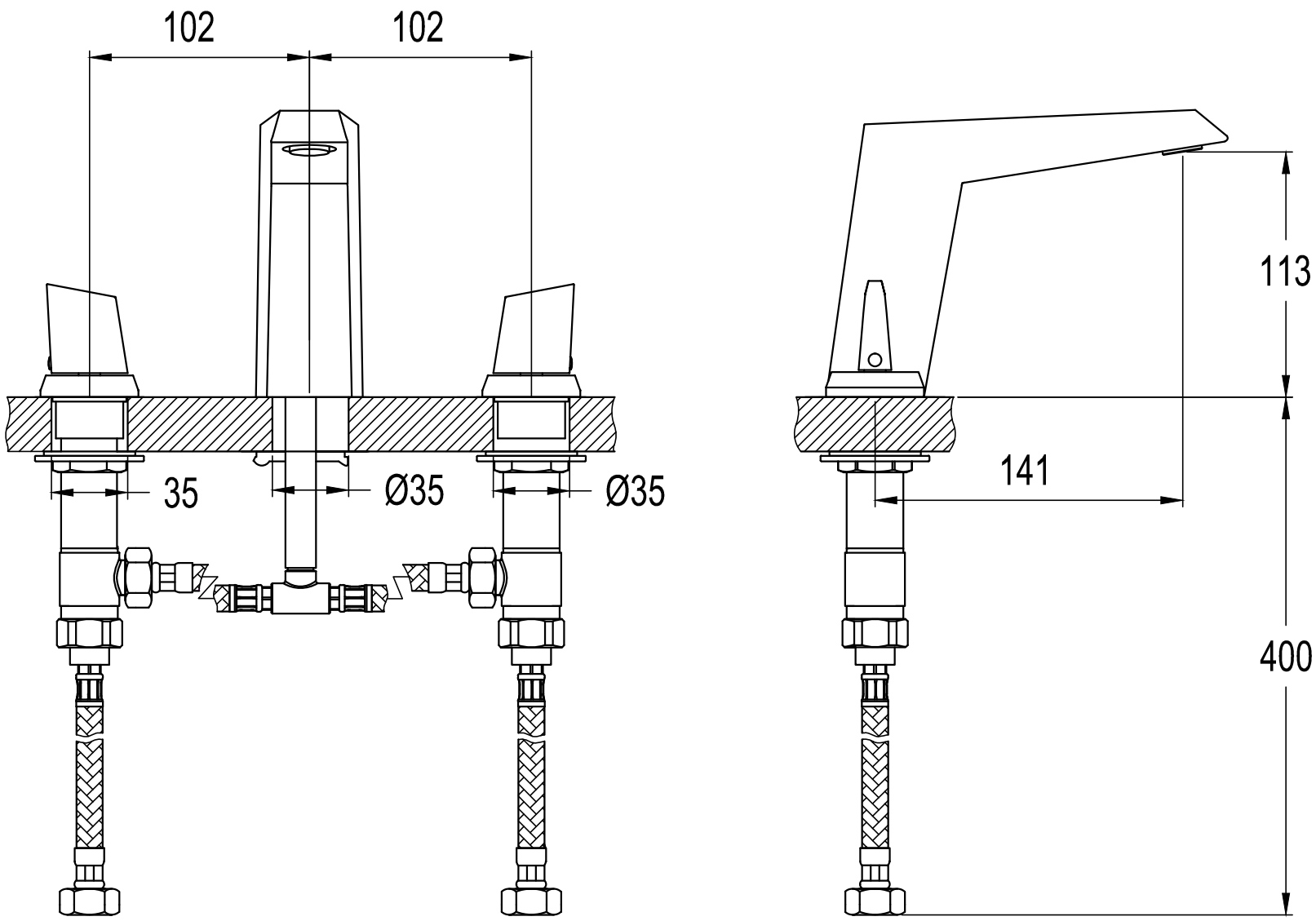
102
102
35
Ø35
Ø35
113
141
400